Homework # 7
Name: Skyler Choplin

No questions this time so here are several images of the circuit to show that the two pics communicated and a video of the functionality. Also unfortunately I didn't have any more stronger resistors to turn down the brightness on one of the LED's, so I covered it with a paper towel to make it so that the camera sensor wouldn't be blown out.

Video of functionality
https://photos.app.goo.gl/Lrfy1uzd7tLxZan78
Right Pic

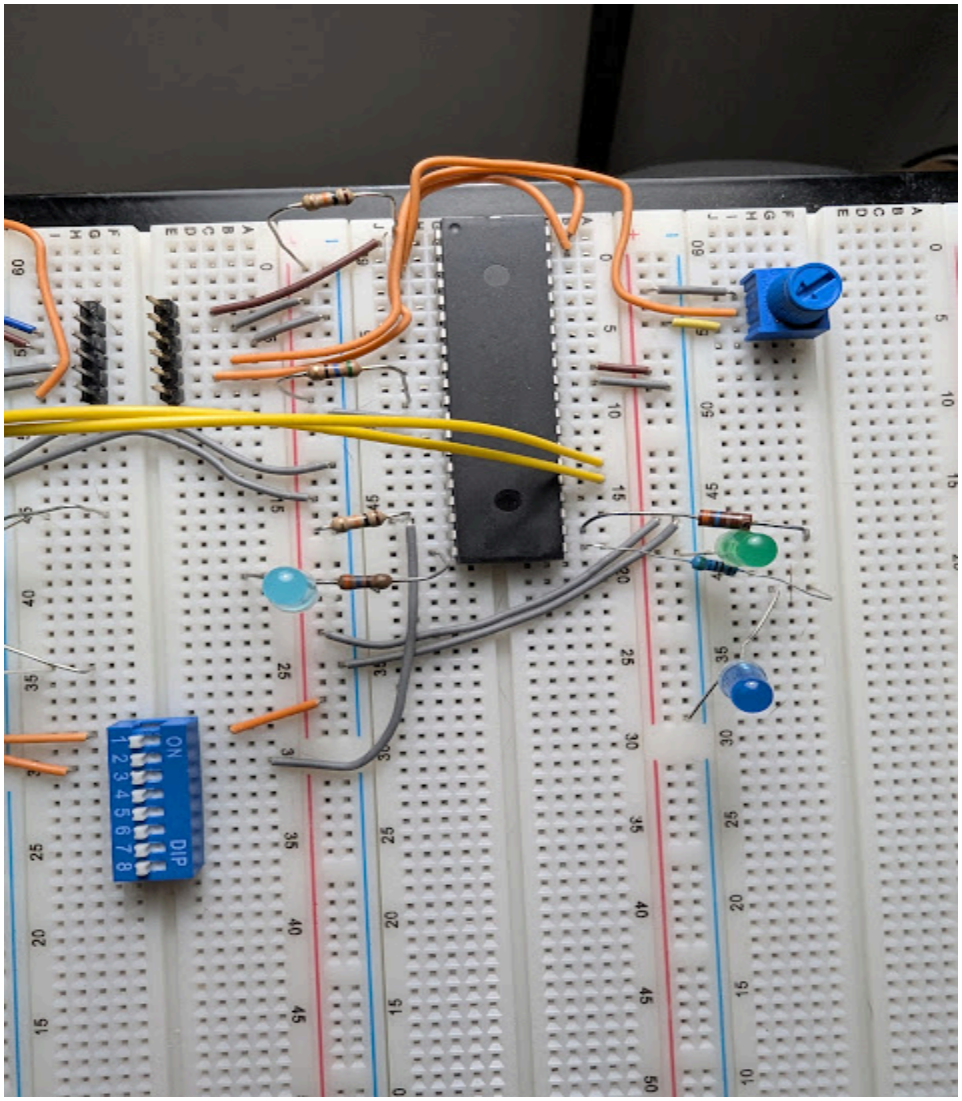

Left Pic

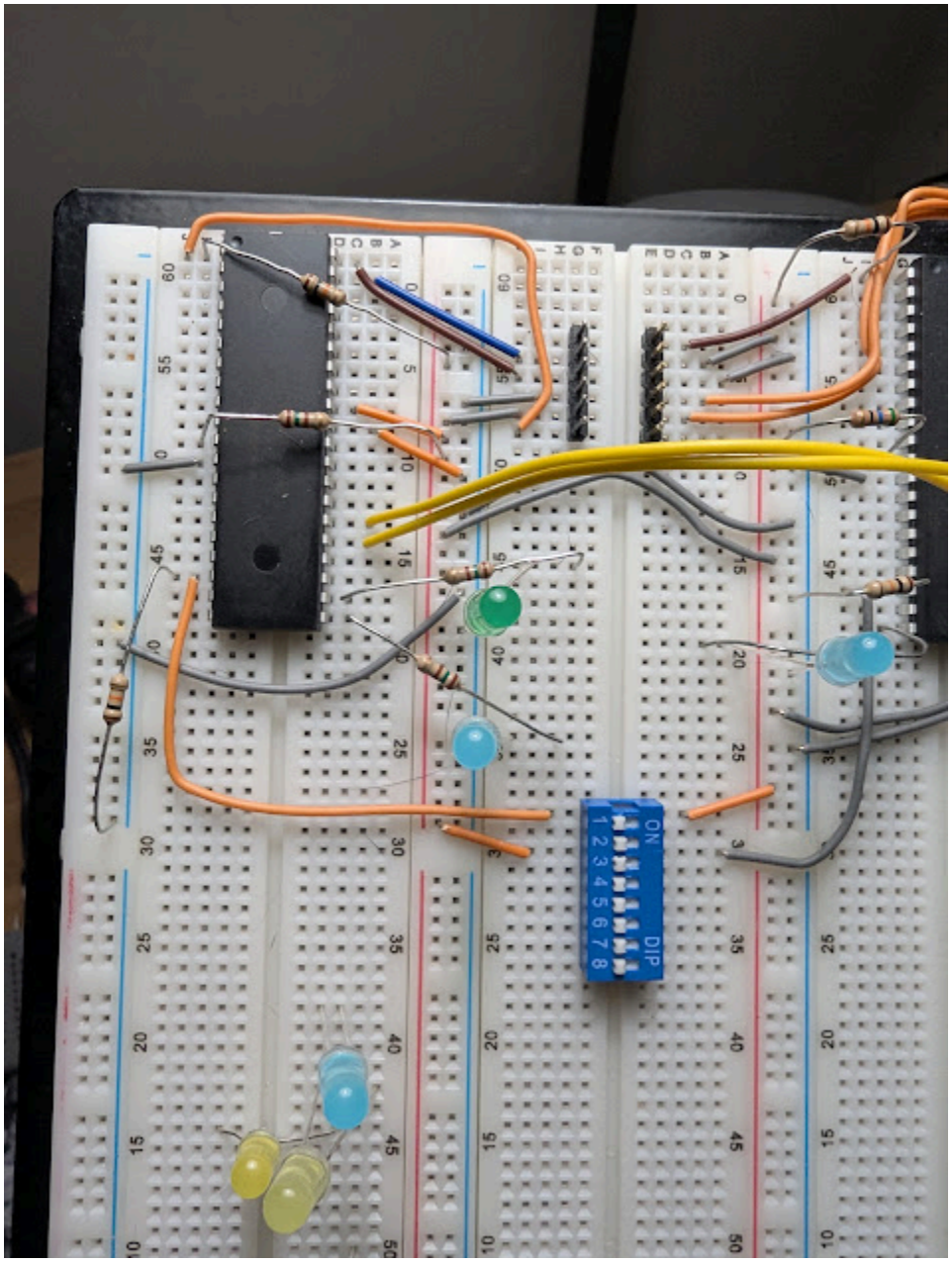
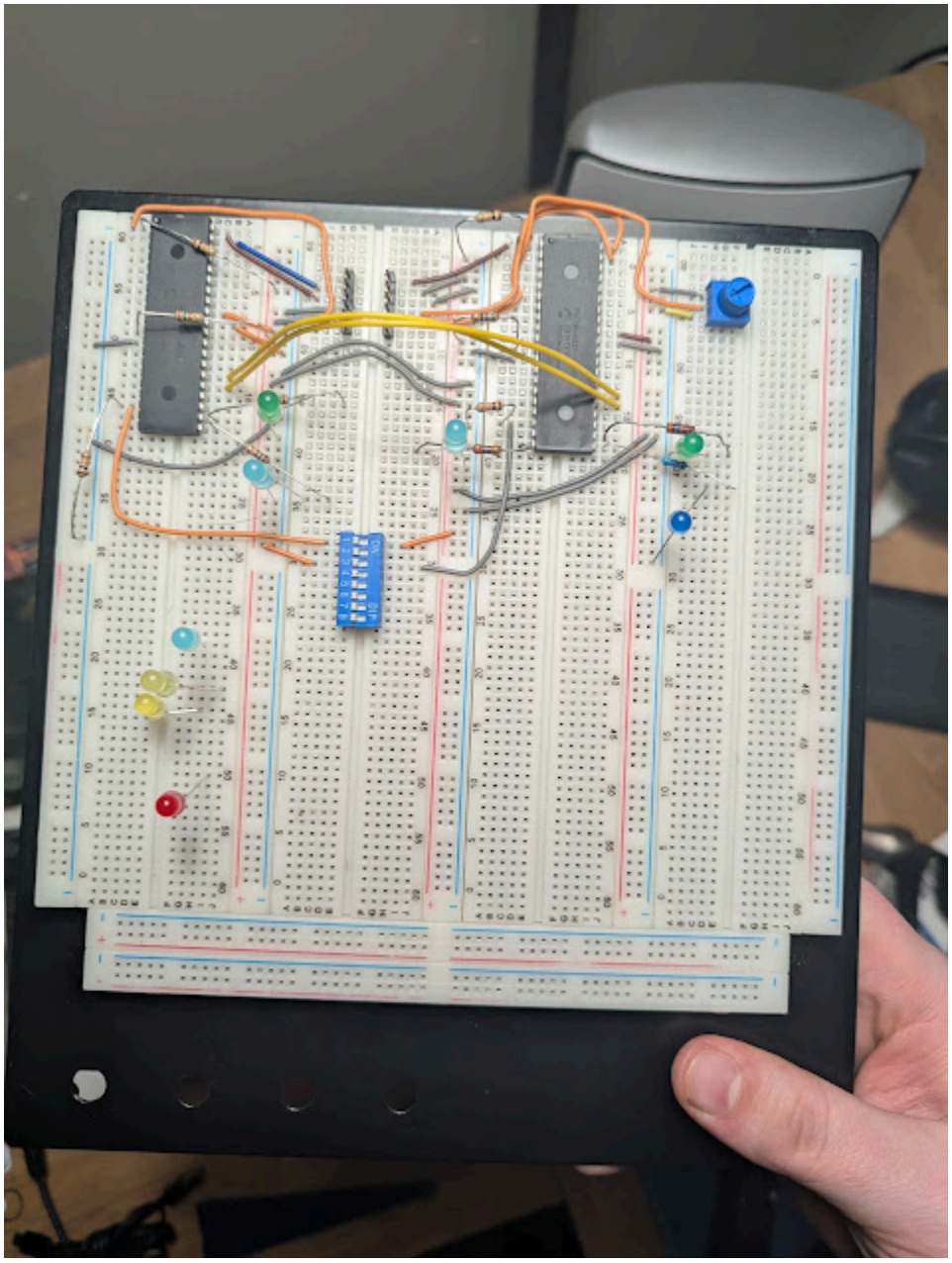
Full Circuit